Maldon United Reformed Church

Video System 4.3

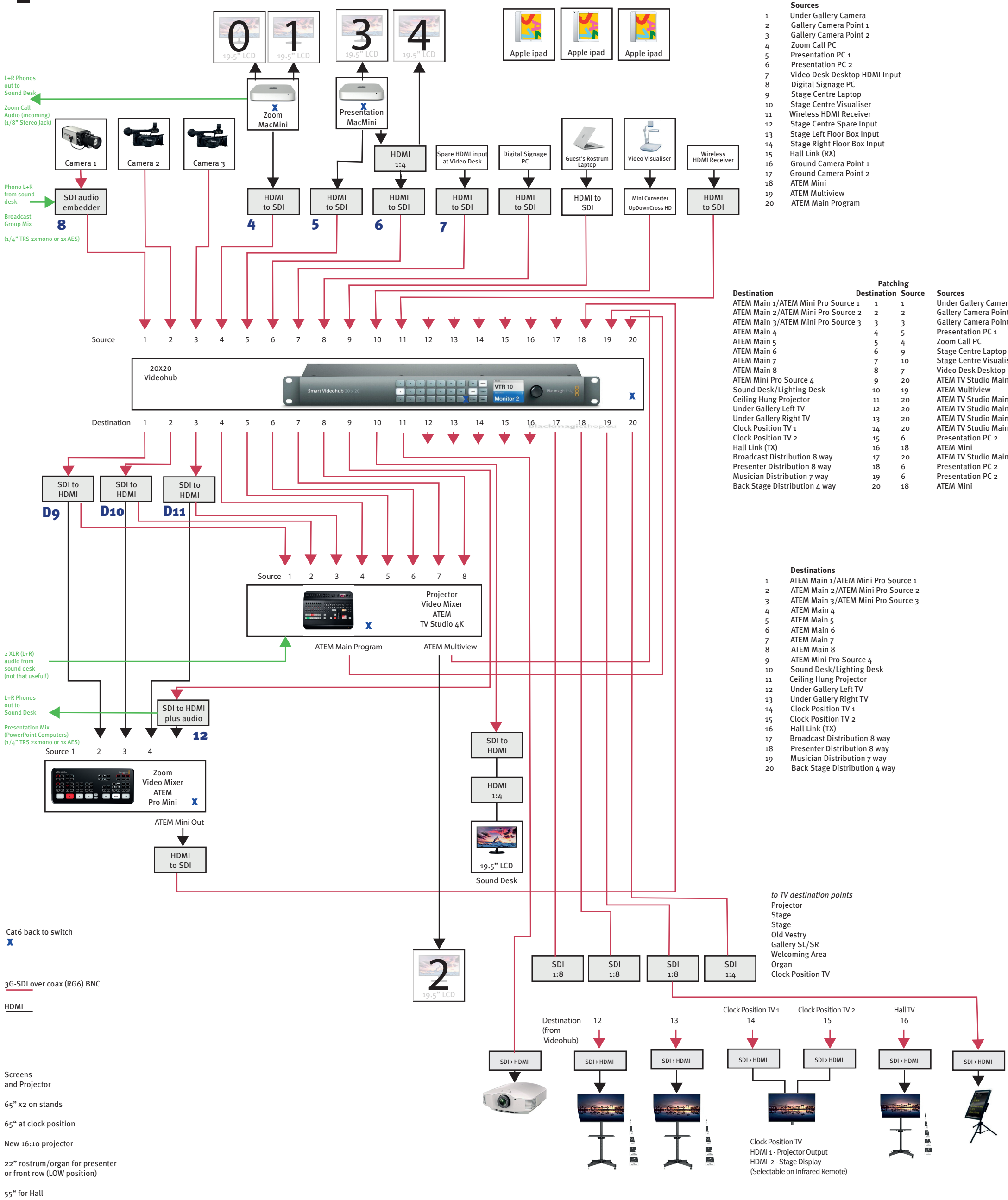

Sources

1	Under Gallery Camera
2	Gallery Camera Point 1
3	Gallery Camera Point 2
4	Zoom Call PC
5	Presentation PC 1
6	Presentation PC 2
7	Video Desk Desktop HDMI Input
8	Digital Signage PC
9	Stage Centre Laptop
10	Stage Centre Visualiser
11	Wireless HDMI Receiver
12	Stage Centre Spare Input
13	Stage Left Floor Box Input
14	Stage Right Floor Box Input
15	Hall Link (RX)
16	Ground Camera Point 1
17	Ground Camera Point 2
18	ATEM Mini
19	ATEM Multiview
20	ATEM Main Program

Patching

Destination	Destination	Source	Sources
ATEM Main 1/ATEM Mini Pro Source 1	1	1	Under Gallery Camera
ATEM Main 2/ATEM Mini Pro Source 2	2	2	Gallery Camera Point 1
ATEM Main 3/ATEM Mini Pro Source 3	3	3	Gallery Camera Point 2
ATEM Main 4	4	5	Presentation PC 1
ATEM Main 5	5	4	Zoom Call PC
ATEM Main 6	6	9	Stage Centre Laptop
ATEM Main 7	7	10	Stage Centre Visualiser
ATEM Main 8	8	7	Video Desk Desktop HDMI Input
ATEM Mini Pro Source 4	9	20	ATEM TV Studio Main Program
Sound Desk/Lighting Desk	10	19	ATEM Multiview
Ceiling Hung Projector	11	20	ATEM TV Studio Main Program
Under Gallery Left TV	12	20	ATEM TV Studio Main Program
Under Gallery Right TV	13	20	ATEM TV Studio Main Program
Clock Position TV 1	14	20	ATEM TV Studio Main Program
Clock Position TV 2	15	6	Presentation PC 2
Hall Link (TX)	16	18	ATEM Mini
Broadcast Distribution 8 way	17	20	ATEM TV Studio Main Program
Presenter Distribution 8 way	18	6	Presentation PC 2
Musician Distribution 7 way	19	6	Presentation PC 2
Back Stage Distribution 4 way	20	18	ATEM Mini

Destinations

1	ATEM Main 1/ATEM Mini Pro Source 1
2	ATEM Main 2/ATEM Mini Pro Source 2
3	ATEM Main 3/ATEM Mini Pro Source 3
4	ATEM Main 4
5	ATEM Main 5
6	ATEM Main 6
7	ATEM Main 7
8	ATEM Main 8
9	ATEM Mini Pro Source 4
10	Sound Desk/Lighting Desk
11	Ceiling Hung Projector
12	Under Gallery Left TV
13	Under Gallery Right TV
14	Clock Position TV 1
15	Clock Position TV 2
16	Hall Link (TX)
17	Broadcast Distribution 8 way
18	Presenter Distribution 8 way
19	Musician Distribution 7 way
20	Back Stage Distribution 4 way